United States Patent [19]

Nilsson et al.

[11] **Patent Number: 4,934,358**

[45] **Date of Patent: Jun. 19, 1990**

[54] **DEVICE FOR SELF-ADMINISTRATION OF PHYSIOLOGICALLY ACTIVE SUBSTANCES, WITH PREVENTION OF OVERDOSING**

[75] Inventors: **Sven-Erik Nilsson**, Döbeliusvägen 39, S-253 67 Helsingborg; **Ove B. Fernö**, Helsingborg; **Jan E. Lilja**, Kristianstad, all of Sweden

[73] Assignee: **Sven-Erik Nilsson**

[21] Appl. No.: 250,691

[22] PCT Filed: Mar. 20, 1987

[86] PCT No.: PCT/SE87/00146

§ 371 Date: Nov. 18, 1988

§ 102(e) Date: Nov. 18, 1988

[87] PCT Pub. No.: WO87/05813

PCT Pub. Date: Oct. 8, 1987

[30] **Foreign Application Priority Data**

Mar. 24, 1986 [SE] Sweden 8601351

[51] Int. Cl.[5] A61M 11/00; A61M 16/00

[52] U.S. Cl. 128/200.23; 128/202.22; 128/203.13

[58] Field of Search 128/200.14, 200.23, 128/204.19, 204.21, 203.12, 203.13, 203.14, 203.23, 203.24, 200.11, 200.12, 200.13, 200.21, 200.22, 200.24, 202.21, 203.15, 204.11

[56] **References Cited**

U.S. PATENT DOCUMENTS

4,106,503	8/1978	Rosenthal et al.	128/203.12
4,393,884	7/1983	Jacobs	128/200.23
4,462,398	7/1984	Durkan et al.	128/200.14
4,817,822	4/1989	Rand et al.	128/200.23

FOREIGN PATENT DOCUMENTS

WO86/02275	4/1986	PCT Int'l Appl.	128/200.23

Primary Examiner—Edgar S. Burr
Assistant Examiner—Kimberly L. Asher
Attorney, Agent, or Firm—Burgess, Ryan and Wayne

[57] **ABSTRACT**

A device for self-administration of physiologically active substances without the occurrence of overdosing, includes a container accommodating at least one substance and propellant means for propelling the substances out of the container, nozzle means connected to the container for discharging a substance, a valve connected between the nozzle and the container such that a predetermined amount of the substance is propelled from the container each time the valve has been opened, and manually activated electronic control means for opening the valve in response to manual activation of the electronic control means and for preventing opening of the valve greater than a predetermined number of times within a predetermined time period.

4 Claims, 3 Drawing Sheets

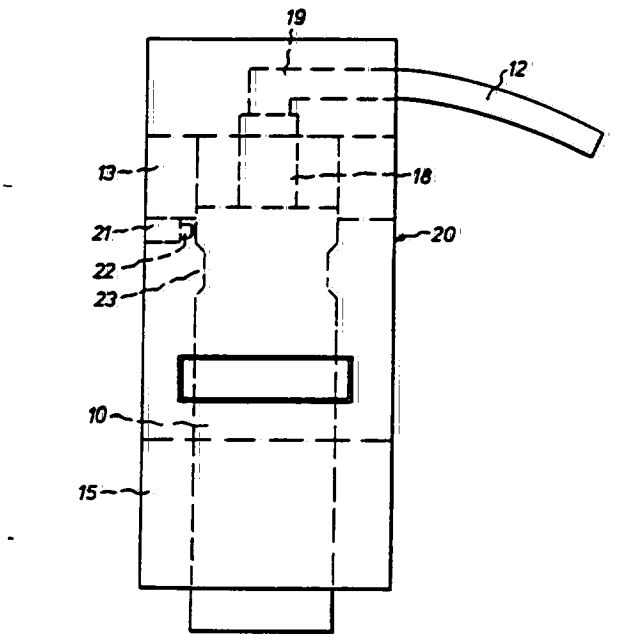

RECEIVED
PHILIP MORRIS MANAGEMENT CORP.
LAW DEPT—PATENT SECTION

AUG - 2 1990

NOTED none cited
(IC 5th ed via Search)

2021343287

Source: https://www.industrydocuments.ucsf.edu/docs/pzkl0000